Current part is item (16) on diagram. Available at www.oshkoshequipment.com

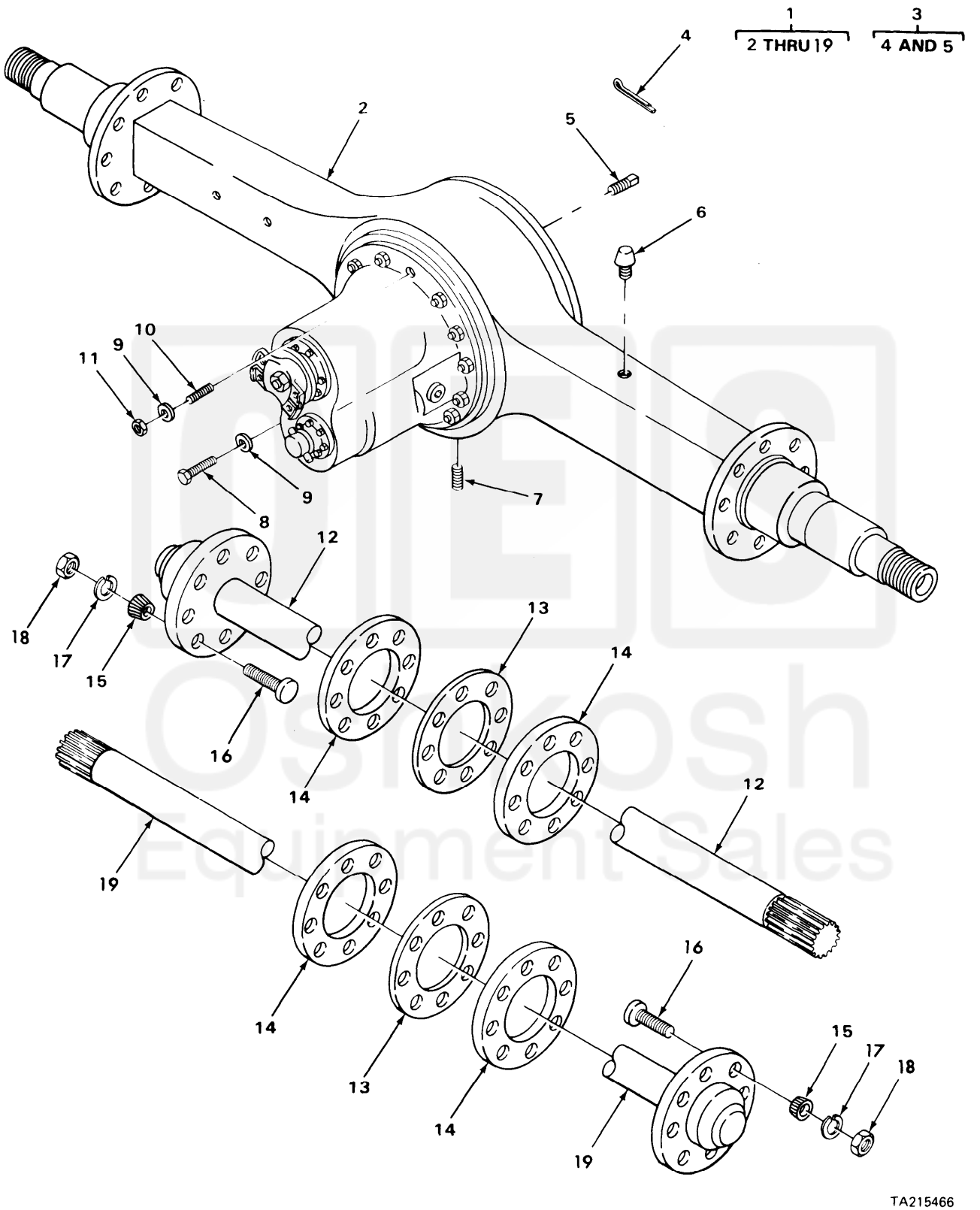

FIGURE 92. FORWARD REAR AXLE AND REAR REAR AXLE ASSEMBLIES (MODEL M915).

Current part is item (16) on diagram. Available at www.oshkoshequipment.com

Current part is item (16) on diagram. Available at www.oshkoshequipment.com

(1) ITEM NO	(2) SMR CODE	(3) FSCM	(4) PART NUMBER	(5) DESCRIPTION AND USABLE ON CODE (UOC)	(6) QTY
				GROUP:11 REAR AXLE GROUP:1100 REAR AXLE ASSEMBLY	
				FIGURE 92. FORWARD REAR AXLE AND REAR REAR AXLE ASSEMBLIES (MODEL M915).	
1	PAFHD	78500	QHP-QX1	AXLE ASSEMBLY,AUTOM FORWARD REAR, COMPONENTS SAME AS P/N QAR-QX65 EXCEPT WHERE INDIVIDUAL COMPONENTS ARE ANNOTATED UOC:U21	1
1	PAFHD	78500	QHP-QX49	AXLE ASSEMBLY,AUTOM FORWARD (WET), COMPONENTS SAME AS P/N QAR-QX65 EXCEPT WHERE INDIVIDUAL COMPONENTS ARE ANNOTATED UOC:U21	1
1	PAFHH	78500	QAR-QX65	AXLE ASSEMBLY,AUTOM (OIL) UOC:U21	1
2	XAFZZ	78500	C1-3121-B-28-S	.HOUSING ASSEMBLY UOC:U21	1
2	XAFZZ	78500	C 1-3121-C-29S	.HOUSING ASSEMBLY UOC:U21	1
3	PAOOO	78500	A-1199-S-1709	.PLUG,ASSEMBLY UOC:U21	1
4	PBOZZ	96906	MS4665-283	..PIN,COTTER UOC:U21	1
5	PAOZZ	78500	1850V48	..PLUG,PIPE UOC:U21	1
6	PAOZZ	78500	A 1199P1394	.BREATHER UOC:U21	1
7	PAOZZ	78500	1250Z182	.PLUG,PIPE,MAGNETIC UOC:U21	1
8	PBFZZ	78500	S-21014-1	.SCREW,CAP,HEXAGON UOC:U21	10
9	PAFZZ	78500	1229U1503	.WASHER,FLAT UOC:U21	14
10	PBFZZ	78500	SN1021-1	.STUD,PLAIN UOC:U21	4
11	PAFZZ	78500	N 110-1	.NUT,PLAIN,HEXAGON UOC:U21	4
12	PAOZZ	78500	3202-L-6356	.SHAFT,AXLE,AUTOMOTI FORWARD REAR, RH,USE WITH P/N QHP-QX1,QHP-QX49 UOC:U21	1
12	PAOZZ	78500	3202-N-6358	.SHAFT,AXLE,AUTOMOTI REAR-REAR,RH, USE WITH P/N QAR-QX1,QAR-QX65 UOC:U21	1
13	PAOZZ	78500	A1205U619	.SEAL OIL OUTER UOC:U21	2
13	PAOZZ	78500	A1205N612	.SEAL ASSY, OUTER UOC:U21	2
14	PAOZZ	79780	2208X440	.GASKET PART OF KIT P/N KIT-936 PART	4

Current part is item (16) on diagram. Available at www.oshkoshequipment.com

Current part is item (16) on diagram. Available at www.oshkoshequipment.com

(1) ITEM NO	(2) SMR CODE	(3) FSCM	(4) PART NUMBER	(5) DESCRIPTION AND USABLE ON CODE (UOC)	(6) QTY
				OF KIT P/N KIT 940 UOC:U21	
15	PAOZZ	78500	1246D290	.BUSHING,TAPERED UOC:U21	16
16	PAOZZ	78500	4X1027	.STUD UOC:U21	16
17	PAOZZ	96906	MS35335-39	.WASHER,LOCK UOC:U21	16
18	PAOZZ	78500	NL-110-1	.NUT,HEX UOC:U21	16
19	PAOZZ	78500	3202-N-6358	.SHAFT,AXLE,AUTOMOTI FORWARD REAR, LH,USE WITH P/N QHP-QX1,QHP-QX49 UOC:U21	1
19	PAOZZ	78500	3202-L-6356	.SHAFT,AXLE,AUTOMOTI REAR-REAR,LH, USE WITH P/N QAR-QX1,QAR-QX65 UOC:U21	1
				END OF FIGURE	

Current part is item (16) on diagram. Available at www.oshkoshequipment.com